Beckett®

AF / AFG BURNER MANUAL

WARNING

Potential for Fire, Smoke and Asphyxiation Hazards

Incorrect installation, adjustment, or misuse of this burner could result in death, severe personal injury, or substantial property damage.

To the Homeowner or Equipment Owner:

- Please read and carefully follow all instructions provided in this manual regarding your responsibilities in caring for your heating equipment.
- Contact a professional, qualified service agency for installation, start-up or service work.
- Save this manual for future reference.

To the Professional, Qualified Installer or Service Agency:

- Please read and carefully follow all instructions provided in this manual before installing, starting, or servicing this burner or heating system.
- The Installation must be made in accordance with all NFPA (National Fire Protection Association®) state and local codes having jurisdiction.

Beckett®

To the Owner:

Thank you for purchasing a Beckett burner for use with your heating appliance. Please pay attention to the Safety Warnings contained within this instruction manual. Keep this manual for your records and provide it to your qualified service agency for use in professionally setting up and maintaining your burner.

Your Beckett burner will provide years of efficient operation if it is professionally installed and maintained by a qualified service technician. If at any time the burner does not appear to be operating properly, **immediately contact your qualified service agency** for consultation.

We recommend annual inspection/ service of your heating system by a qualified service agency.

Daily – Check the room in which your burner/appliance is installed. Make sure:

- Air ventilation openings are clean and unobstructed
- Nothing is blocking burner inlet air openings
- No combustible materials are stored near the heating appliance
- There are no signs of fuel or water leaking around the burner or appliance

Weekly

- Check your fuel tank level. Always keep your fuel tank full, especially during the summer, in order to prevent condensation of moisture on the inside surface of the tank.

Contents

General Information 3-5
- Hazard Definitions 3

▼ Remainder of manual to be used ONLY BY QUALIFIED SERVICE TECHNICIANS ▼

Inspect/Prepare Installation Site 6-8
- Inspect Chimney or Direct Vent System 6
- Combustion air supply 6
- Clearances to burner and appliance 7
- Combustion chamber — Burner retrofitting 7

Prepare the Burner 8-11
- Burner fuel unit 8
- Attach air tube (if not already installed) 8
- Nozzle and Pump Pressure 8-9
- Check/adjust electrodes 9
- Servicing nozzle line assembly 9
- Low Firing Rate Baffle 9
- Check/Adjust 'Z' Dimension - 'F' heads, 'L' heads, 'V' heads 10-11

Mount Burner on Appliance 12-13
- Mounting options 12
- Mounting dimensions 12
- Installing the Oil Tank and Supply System 13

Wire burner 14
- Burner packaged with appliance 14
- Burner installed at job site 14

Start Up Burner/Set Combustion 14-16
- Startup / Checkout 15
- Priming the Pump 15
- Check Safety Features 15
- Set combustion with instruments 15-16

Perform Regular Maintenance 16-17
- Shutting the Burner Off 17

Replacement Parts 18

Air Tubes, Nozzle Lines, Electrodes, Parts 19

Burner Mounting Flange & Pedestals 20

Burner Accessories 21

Burner Gauges, myTechnician App™ 22

Limited Warranty Information 24

General Information

Hazard Definitions

DANGER **Indicates a hazardous situation, which, if not avoided, will result in death or serious injury.**

WARNING **Indicates a hazardous situation, which, if not avoided, could result in death or serious injury.**

CAUTION **Indicates a hazardous situation, which, if not avoided, could result in minor or moderate injury.**

Within the boundaries of the hazard warning, there will be information presented describing consequences if the warning is not heeded and instructions on how to avoid the hazard.

NOTICE Intended to bring special attention to information, but not related to personal injury or property damage.

WARNING **Owner's Responsibility**

Incorrect installation, adjustment, and use of this burner could result in severe personal injury, death, or substantial property damage from fire, carbon monoxide poisoning, soot or explosion.

Contact a professional, qualified service agency for the installation, adjustment and service of your oil heating system. This work requires technical training, trade experience, licensing or certification in some states and the proper use of special combustion test instruments.

Please carefully read and comply with the following instructions:

- Never store or use gasoline or other flammable liquids or vapors near this burner or appliance.
- Never attempt to burn garbage or refuse in this appliance.
- Never attempt to light the burner/appliance by throwing burning material into the appliance.
- Never attempt to burn any fuel not specified and approved for use in this burner.
- Never restrict the air inlet openings to the burner or the combustion air ventilation openings in the room.

Commonly Used Tools:

- Beckett T28 Bleed Wrench
- Beckett 52100L Gauge Kit
- Smoke Test Kit
- Combustion Gas Analyzer
- 1/4" Nut driver or socket with extension
- 5/16" Nut driver or socket with extension
- 3/8" Nut driver or socket with extension
- 1/8" Allen wrench
- 5/32" Allen wrench (bypass plug)
- 1/4" Allen wrench (for pump plug removal)
- 7/16" Open end wrench for oil line fittings
- 5/8" Open end wrench for nozzle replacement and pump plug removal
- 3/4" Open end wrench for nozzle replacement
- Phillips screwdriver (Posi-drive, #1 or #2)
- 1/8" Slotted screwdriver (for pump pressure adjustment and bypass plug)
- 1/4" Slotted screwdriver
- Needle nose pliers (for disconnecting flag terminals)
- 11/16" Box end wrench (for loosening spline nut)

Figure 1. Burner label location

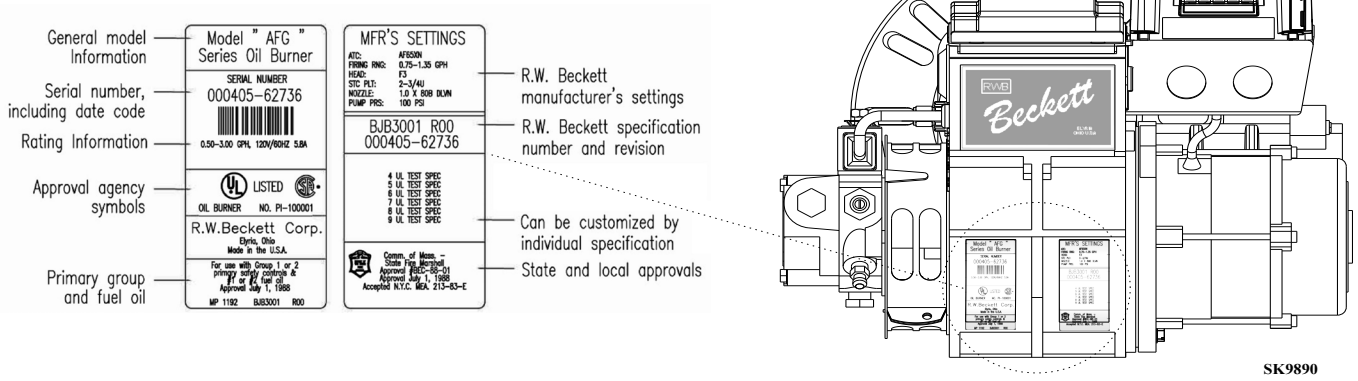

WARNING

Do NOT Alter the Original Burner Design

Tampering with or altering the burner design could seriously impair performance, resulting in loss of static pressure, damage to the system components, reduced air volume, heavy smoke, flame impingement, appliance sooting, hot gas puff-back, and asphyxiation or fire hazards.

Maintain the design to its original configuration.
Only use parts specified for AF or AFG Burners.
Do NOT remove the air guide from the AFG chassis.
Do NOT use 'M' Series air tube combinations on AF Burners.

Never try to convert an AF to an AFG or vice versa
Any design alteration will:

- Void UL Listing
- Void manufacturer's warranties
- Seriously impact burner performance
- Greatly increase your liability risk

WARNING

Impaired Burner Performance and Fire Hazard.

Do NOT operate the burner beyond specifications outlined in the following Table.

- For applications beyond these limits, consult Beckett Technical Service at 1-800-645-2876.
- NOTE: Some packaged appliances with burners may be agency listed as a unit to operate beyond these limits. Consult the appliance manufacturer's specifications and agency approvals for verification.

CAUTION

Frozen Plumbing and Water Damage Hazard

If the residence is unattended in severely cold weather, burner primary control safety lockout, heating system component failures, power outages or other electrical system failures could result in frozen plumbing and water damage in a matter of hours. For protection, take preventive actions such as having a security system installed that operates during power outages, senses low temperature and initiates an effective action. Consult with your heating contractor or a home security agency.

NOTICE

NOTICE (to the homeowner): Annual inspection/maintenance by a qualified service provider is always required. If any of the following apply, more frequent annual inspection/maintenance is required.

- The burner on time (run time) is frequently less than 5 minutes ("short cycling").
- The burner operates year-round (domestic hot water applications).
- The fuel type/biodiesel content has changed or is unknown.

Figure 2 – Burner Specifications

Capacity *(Note 1)*	AF Burner: 0.40 – 3.00 GPH AFG Burner: 0.40 – 3.00 GPH Refer to ***Figure 3***, Page 5 for further information	
Certifications/ Approvals	ANSI / UL296 and CSA – B140.0	
Approved Fuels	USA: Heating Oil – No. 1 Per ASTM D396 (S15, S500, S5000); Heating Oil – No. 2 Per ASTM D396 (S15, S500, S5000); Heating Oil – to B20 Per ASTM D396 (S15, S500, S5000); B100 Biodiesel Per ASTM D6751; Biodiesel Blends from B21-B100 made from ASTM D6751 B100 and #1 or #2 from D396; Renewable Diesel in any percentage up to R100 that meets ASTM D975. No. 2 Heating Oil. Canada: Heating Oil Types 0,1,2 Per CAN/CGSB-3.2 **WARNING** **SEE WARNING SECTION BELOW**	
Electrical: Input Voltage	120 VAC / 60Hz / 1 Phase	
Current	5.8 Amps Maximum	
Motor	Beckett p/n 21805: 1/7 HP, 3450 RPM, PSC, NEMA 48	
Igniter	Beckett p/n 51771: Electronic Solid State rated for continuous duty.	
Fuel Pump *(Note 2)*	Beckett p/n PF2032x Solenoid coil 120VAC Inlet Pressure: 3 psi maximum Outlet Pressure: 100-200 psi	
Air Tube Combinations	ATC Codes and selection – See ***Figure 3***, page 5	
Dimensions (Less Tube)	**Less Cover:** Height: 10-3/8" Width: 12-1/2" Depth: 6-1/2" **Air Tube:** 4.0" Ø	**With Cover:** Height: 10-3/8" Width: 12-1/2" Depth: 9-1/4" **Air Tube:** 4.0" Ø
Operating Temperature *(Note 3)*	+32°F (0°C) Minimum +140°F (60°C) Maximum at nominal voltage	
Environmental	5% to 95% RH, non-condensing	

Note 1: Approval Agency listings rate these burners for 0.40 – 3.00 GPH. However, the firing rate range is limited by the specific air tube combination being used. Refer to ***Figure 3**, Page 5.*
Note 2: See appliance manufacturer's burner specifications for recommended pump discharge pressure.
Note 3: Operating temperatures above or below listed specifications must be approved by RW Beckett.

WARNING

Use ONLY Fuels Listed for Use with this Burner

Use of unapproved fuels could result in explosion, fire, personal injury or death, and/or damage to equipment and property.

- DO NOT USE Raw Vegetable Oil (RVO) or any fuel blended with RVO
- DO NOT USE with Flammable Liquids; Gasoline, LP gas, charcoal lighter fluid, etc.
- For a listing of alternative fuels please refer to Beckett's website (https://www.beckettcorp.com)

Figure 3: Model AF / AFG Air Tube Combination (ATC) Codes

Firing Rate GPH (min-max)	Head	Static Plate Size (inches)	ATC Codes For Usable Air Tube Lengths							
			4-1/2”	5-3/8”	6-5/8”	7-1/4”	9”	10-1/2”	13”	16”
-	None	2-3/4 U	AF44	AF53	AF65	AF72	AF90	AF104	AF130	AF160
0.50 - 0.75	F0	3-3/8 U	AF44XR	AF53XR	AF65XR	AF72XR	AF90XR	AF104XR	AF130XR	AF160XR
0.75 - 1.25	F3	2-3/4 U	AF44XN	AF53XN	AF65XN	AF72XN	AF90XN	AF104XN	AF130XN	AF160XN
0.85 - 1.35	F4	2-3/4 U	AF44WH	AF53WH	AF65WH	AF72WH	AF90WH	AF104WH	AF130WH	AF160WH
0.85 - 1.65	F6	2-3/4 U	AF44YB	AF53YB	AF65YB	AF72YB	AF90YB	AF104YB	AF130YB	AF160YB
1.10 - 2.00	F12	2-3/4 U	AF44XO	AF53XO	AF65XO	AF72XO	AF90XO	AF104XO	AF130XO	AF160XO
1.65 - 2.50	F22	2-3/4 U	AF44XP	AF53XP	AF65XP	AF72XP	AF90XP	AF104XP	AF130XP	AF160XP
2.50 - 3.00	F31	None	AF44XS	AF53XS	AF65XS	AF72XS	AF90XS	AF104XS	AF130XS	AF160XS

Model AFG Type “M” Air Tube Combination (ATC) Codes						
Firing Rate GPH (min-max)	Head	Static Plate Size (inches)	Venturi	ATC Codes For Usable Air Tube Lengths		
				5”	7”	9”
0.50 - 1.10	L1	3-3/8 U	8 holes	AFG50MBSS	AFG70MBSS	AFG90MBSS
0.50 - 1.00	L2	2-3/4 U	8 holes	AFG50MPSS	AFG70MPSS	AFG90MPSS
0.75 - 2.75	V1	2-3/4 U	8 holes	AFG50MDSS	AFG70MDSS	AFG90MDSS

Note: ATC's for specific manufacturers are listed in the Beckett OEM Specification Guide and can also be found by visiting www.beckettcorp.com.

NOTICE

Special Requirements

- Burner and/or appliance installations in the United States must comply with NFPA 31 (National Fire Protection Association) Standard for the Installation of Oil-Burning Equipment, NFPA 70 (National Electric Code), as well as all state and local codes (AHJ)
- Installations in Canada must comply with the latest editions of CSA B139 (Installation Code for Oil Burning Equipment), CSA Standard C22, Part 1 (Canadian Electric Code), and all applicable local codes.
- Concealed damage — If you discover damage to the burner or controls during unpacking, notify the carrier at once and file the appropriate claim.
- **When contacting Beckett for service information**
  — Please ensure you are connected to the burner with the MyTechnician App.
  — Record the burner serial number. You will find the serial number on the silver label on the burner’s left rear. Refer to *Figure 1*.

NOTICE

Fuel Supply System Compatibility

The fuel supply system design and components must be compatible with the fuel being used in the appliance. Follow all guidelines and best practices recommended by the fuel supplier, NFPA 30 & NFPA 31, and any state or local ordinances for safe storage, filtering, conditioning, and delivery to the burner.

WARNING

Professional Service Required

Incorrect installation, adjustment, and use of this burner could result in severe personal injury, death, or substantial property damage from fire, carbon monoxide poisoning, soot or explosion.

Please read and understand the manual supplied with this equipment. This equipment must be installed, adjusted and put into operation only by a qualified individual or service agency that is:

- Licensed or certified to install and provide technical service to oil heating systems.
- Experienced with all applicable codes, standards and ordinances.
- Responsible for the correct installation and commission of this equipment.
- Skilled in the adjustment of oil burners using combustion test instruments.

The installation must strictly comply with all applicable codes, authorities having jurisdiction and the latest revision of the National Fire Protection Association Standard for the installation of Oil-burning Equipment, NFPA 31 (or CSA-B139 in Canada).
Regulation by these authorities takes precedence over the general instructions provided in this installation manual.

Inspect/Prepare Installation Site

Inspect Chimney or Direct Vent System

WARNING **Fire, Smoke & Asphyxiation Hazard**

- Carefully inspect the chimney or exhaust vent system.
- Make sure it is properly sized and in good working condition.
- Follow the instructions supplied by the appliance manufacturer.
- The installation must strictly comply with all applicable codes, authorities having jurisdiction and the latest revision of the National Fire Protection Association Standard NFPA 31 for the installation of chimneys and vent sizing, (or CSA-B139 and CSA-B140 in Canada).
- Regulations by these authorities take precedence over the general instructions provided in this installation manual.

WARNING **Adequate Combustion and Ventilation Air Supply Required**

Failure to provide adequate air supply could seriously affect the burner performance and result in damage to the equipment, asphyxiation, explosion or fire hazards.

- The burner cannot properly burn the fuel if it is not supplied with a reliable combustion air source.
- Follow the guidelines in the latest editions of the NFPA 31 and CSA-B139 regarding providing adequate air for combustion and ventilation.

1. Starting with minimum gph firing rate, the minimum size recommended is 6” flue pipe with 8” X 8” inside chimney, unless specified otherwise by the appliance manufacturer.
2. A chimney flue shall extend at least 3 feet above the highest point at which the chimney comes in contact with the roof, and not less than 2 feet above the highest roof surface or structure within 10 feet horizontally of the chimney.
3. Any accumulation of soot or debris in chimney offsets should be removed.
4. Any obstructions such as a protruding joint or a piece of broken tile wedged in the chimney should be removed.
5. No other appliance connection should be made to the same flue pipe.
6. The flue pipe should have an upward pitch toward the chimney of at least 1/4” per foot of length. It should fit tightly and should not project into the chimney.
7. Any leakage between tiles, around clean-out doors, or around the vent pipe should be sealed.

Insulated stainless steel chimney liners

The new designs of high-efficiency oil furnaces and boilers in conjunction with flame retention oil burners are more efficient. One result of increased efficiency is lower flue gas temperatures. As flue gases rise in the chimney, they will cool and condense when they reach the dew point. The condensation will mix with the sulfur in the flue gases creating sulfuric acid. The acid will attack the chimney mortar, brick and clay liners causing the chimney’s corrosion, deterioration and blockage. Eventually, the blockage could prevent exhausting the flue gases. Instead, the flue gases could vent out the barometric damper into the living space.

Therefore, it is strongly recommended that an approved insulated stainless steel liner be installed.

- For those installations not requiring a chimney, such as through-the-wall vented appliances, follow the instructions given by the appliance and power venter (if used) manufacturers.

Combustion air supply

Appliance located in confined space

The confined space should have two (2) permanent openings: one near the top of the enclosure and one near the bottom of the enclosure. Each opening shall have a free area of not less than (1) one square inch per 1,000 BTU’s per hour of the total input rating of all appliances within the enclosure. The openings shall have free access to the building interior, which should have adequate infiltration from the outside.

Exhaust fans and other air-using devices

Size air openings large enough to allow for all air-using devices in addition to the minimum area required for combustion air. If there is any possibility of the equipment room developing negative pressure (because of exhaust fans or clothes dryers, for example), either pipe combustion air directly to the burner or provide a sealed enclosure for the burner and supply it with its own combustion air supply.

Direct air supply and sidewall venting

- Some AFG burners are equipped with combustion air boots to allow use of outside air for combustion.
- Air boot kits are available to adapt most AF & AFG burners. Please refer to the Replacement Parts section on page 19-22.
- When sidewall venting appliances, carefully follow appliance and power venter instructions for installation and wiring.

Outside air kit applications

Refer to separate instruction sheet(s) included with any outside air kit or power vent system being installed.

WARNING **Follow the Outside Air Kit Instructions Exactly**

Failure to comply could result in impaired combustion, appliance soot-up, puffback of smoke, and fire or asphyxiation hazards.

- Do not attempt to install outside air piping to the burner without using the outside air kit and instructions.

Clearances to burner and appliance

- Provide space around the burner and appliance for easy service and maintenance.
- Check minimum clearances against those shown by the appliance manufacturer and by applicable building codes.

Combustion chamber — Burner retrofitting

Verify that the appliance combustion chamber provides at least the minimum dimensions given in ***Figure 5***.

Combustion Air Temperature at Burner During Setup	CO2 Range	O2 Range
-25°F to 5°F	10.5% to 11.0%	6.0% to 6.7%
5°F to 35°F	11.0% to 11.5%	5.3% to 6.0%
35°F to 65°F	11.5% to 12.5%	4.0% to 5.3%
above 65°F	12.5% to 13.0%	3.3 % to 4.0%

Figure 5. Chamber Dimensions

Chamber Dimensions (inches)					
Firing Rate (GPH)	Round I.D.	Rectangular		Height	Floor to nozzle
		Width	Length		
0.50	8	7	8	12	5-6
0.75	9	8	9	12	5-6
1.00	10	9	10	12.5	5-6
1.25	11	10	11	12.5	5-6
1.50	12	11	12	13	6-7
2.00	14	12	15	13.5	6-7
2.50	16	13	17	14	7-8
3.00	18	14	18	15	7-8

BTU vs. Chamber Pressure

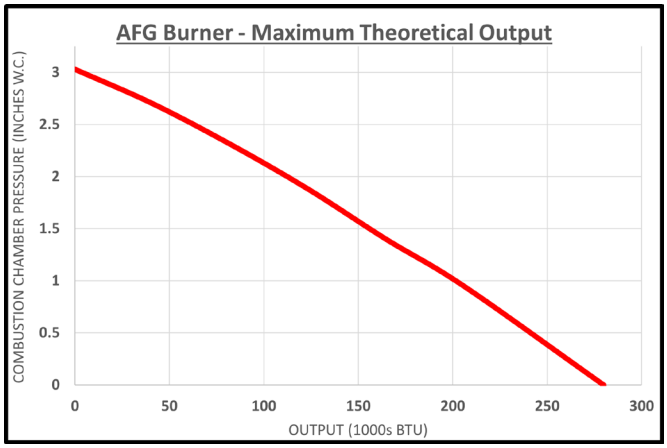

Theoretical maximum output (BTU) for a given combustion chamber pressure (in.w.c.)

WARNING

Correct Nozzle and Flow Rate Required

Incorrect nozzles and flow rates could result in impaired combustion, under-firing, over-firing, sooting, puff-back of hot gases, smoke and potential fire or asphyxiation hazards.

Use only nozzles having the flow rate (gph), spray angle and pattern specified by the manufacturer.

Follow the appliance manufacturer's specifications for the required pump outlet pressure for the nozzle since this affects the flow rate.

- Nozzle manufacturers calibrate nozzle flow rates at 100 psig.
- When pump pressures are higher than 100 psig, the actual nozzle flow rate will be greater than the gph stamped on the nozzle body. (Example: A 1.00 gph nozzle at 140 psig = 1.18 gph)
- Securely tighten the nozzle (90-inch pounds torque).
- For typical nozzle flow rates at various pressures refer to ***Figure 6***.
- Damaged nozzles can adversely affect combustion. Take care not to damage the nozzle.

If the nozzle is not installed, confirm specified nozzle from the appliance manufacturer. When multiple options are listed, Delavan nozzles are preferred (www.delavan.com). When specification information is not available for the application refer to the guidelines in ***Figure 6***.

Prepare the Burner

Burner fuel unit

Verify that the burner fuel unit is compatible with the oil supply system. For more details, refer to the pump manufacturer's instructions for the burner.

Attach air tube (if not already installed)

If using a flange and gasket, slide them onto the air tube. Then attach the air tube to the burner chassis using the four sheet metal screws provided. Please refer to Installation Instruction sheet included with flange kit.

Figure 6. Nozzle Flow Rate by Size

Nozzle flow rate U. S. gallons per hour of No. 2 fuel oil when pump pressure (psig) is:					
Nozzle size (rated at 100 psig)	**125 psi**	**140 psi**	**150 psi**	**175 psi**	**200 psi**
0.40	0.45	0.47	0.49	0.53	0.56
0.50	0.56	0.59	0.61	0.66	0.71
0.60	0.67	0.71	0.74	0.79	0.85
0.65	0.73	0.77	0.80	0.86	0.92
0.75	0.84	0.89	0.92	0.99	1.06
0.85	0.95	1.01	1.04	1.13	1.20
0.90	1.01	1.07	1.10	1.19	1.27
1.00	1.12	1.18	1.23	1.32	1.41
1.10	1.23	1.30	1.35	1.46	1.56
1.20	1.34	1.42	1.47	1.59	1.70
1.25	1.39	1.48	1.53	1.65	1.77
1.35	1.51	1.60	1.65	1.79	1.91
1.50	1.68	1.77	1.84	1.98	2.12
1.65	1.84	1.95	2.02	2.18	2.33
1.75	1.96	2.07	2.14	2.32	2.48
2.00	2.24	2.37	2.45	2.65	2.83
2.25	2.52	2.66	2.76	2.98	-
2.50	2.80	2.96	-	-	-

Figure 7. Nozzle Spray Angles

Recommended nozzle spray angles	
"F" head	70° or 80° nozzle
"L1" & "L2" head	45°, 60°, or 70° nozzle
"V1" head	45°, 60°, or 70° nozzle

Nozzle and Pump Pressure

Install burner nozzle (if not already installed)

1. Remove the plastic plug protecting the nozzle adapter threads.
2. Place a 3/4" open-end wrench on the nozzle adapter. Insert the nozzle into the adapter and finger-tighten. Finish tightening with a 5/8" open-end wrench. Use care to avoid bending the burner head support legs or electrodes. If you remove the head to replace the nozzle (type "L1"/"L2" or "V1" heads), carefully reconnect the head to the nozzle adapter, making sure that the head support contacts the nozzle adapter shoulder. Refer to ***Figures 11 or 12***.
3. If the nozzle is already installed, remove the nozzle line assembly to verify that the nozzle size and

spray pattern are correct for the application (per appliance manufacturer's information). Verify that the electrode tip settings comply with ***Figure 8***.

4. If the nozzle is not installed, obtain a nozzle from the manufacturer, that has the capacity and spray angle specified in the appliance manufacturer's information. For conversions or upgrades, when information is not available for the application:
   - Refer to ***Figure 7*** to select the mid-range nozzle spray angle for the head type being used.
   - Fire the burner and make sure the combustion is acceptable and the flame is not impinging on chamber surfaces.
   - If a shorter flame is needed, select a wider spray angle. If a longer flame is needed, select a narrower spray angle.

Check/adjust electrodes

Check the electrode tip settings. Adjust if necessary to comply with the dimensions shown in ***Figure 8***. To adjust, loosen the electrode clamp screw and slide/rotate electrodes, as necessary. Securely tighten the clamp screw when finished.

Servicing nozzle line assembly

1. Turn off the power to the burner before proceeding.
2. Disconnect oil connector tube from nozzle line.
3. Loosen the two screws securing igniter retaining clips and rotate both clips to release igniter baseplate. Then tilt igniter back on its hinge.
4. Remove spline nut.
5. "F" head air tube. - Remove nozzle line assembly from burner, being careful not to damage the electrodes or insulators while handling. To ease removal of long assemblies (over 9 inches), rotate assembly 180° from installed position after pulling partially out of tube.
6. "L1", "L2", and "V1" head air tubes. - Slide nozzle line assembly forward (further into air tube) so the head clears the venturi opening. Then rotate the nozzle line assembly 90° so the nozzle line end points up. Pull the nozzle line assembly toward you and remove assembly from burner.
7. To replace the nozzle assembly, reverse the previous steps

Figure 8. – Electrode Tip Adjustment

Standard Dimensions for F, L1, and V1 Heads.

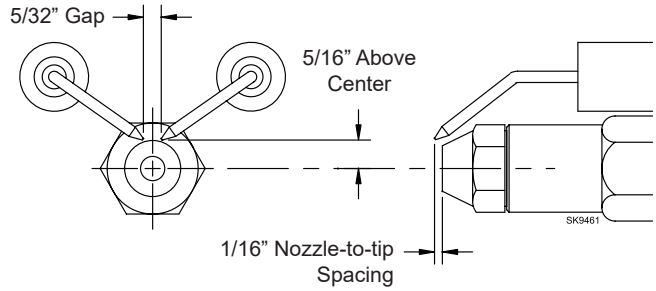

The dimensions shown below are for use with L2 heads and M series air tube combinations ending with an 'N' suffix (example: AFG70MDAQ**N**)

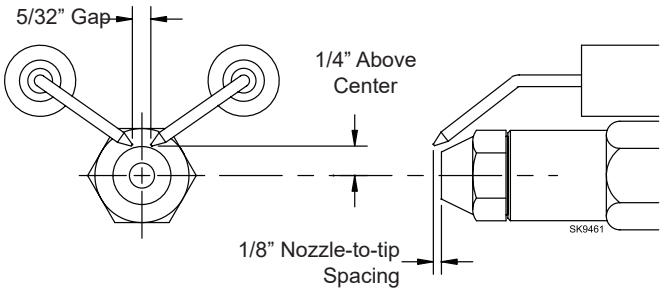

Low Firing Rate Baffle

The AFG Low Firing Rate Baffle (LFRB) reduces the air flow and pressure. The LFRB is sometimes used for firing rates under 1.00 gph as listed in ***Figure 9***. Refer to the appliance manufacturer's instructions. Do not omit the LFRB when specified. Omitting the baffle when specified or installing the baffle when not specified could result in impaired burner performance.

Figure 9. AFG Reduced Firing Rates (with LFRB)

Burner head type	Low Firing Rate Baffle installed
F0	up to 0.65 gph
F3, L1, or L2	up to 0.85 gph
F4 or F6	up to 0.90 gph
V1	up to 1.00 gph

WARNING

Adjust the 'Z' dimension to the required specification.

Incorrect Adjustments could cause combustion problems, carbon deposition from flame impingement, heavy smoke generation and fire hazards.

Make all adjustments exactly as outlined in the following information.

Table 1 - Burner Dimensions

	For usable length A (inches)			
Dimension (inches)	F Head	L1 Head	L2 Head	V1 Head
H (nozzle to head), ±1/32	N/A	1/4	7/32	1/4
L (Total tube length)	A+1/2	A+1/2	A+1/2	A+1/2
R (electrode length), ± 1/4	A+2-1/4	A+1-1/8	A+1-1/8	A+1-1/8
S (adapter to static plate), ± 1/16	(Note 1)	1-3/8	1-3/8	1-3/8
Q (nozzle line length),	A+ 15/16	A+ 3/16	A+ 3/16	A+ 3/16
Z				
(F head-no heat shield)	1-1/8	N/A	N/A	N/A
(F head-with heat shield)	1-3/8	N/A	N/A	N/A
(L1 head w/straight shroud)	N/A	1-3/8	N/A	N/A
(L1/L2/V1 head w/conic shroud)	N/A	1-3/4	1-3/4	1-3/4

Note 1: 1-3/8 for dimension A less than 4"; 1-5/8 for dimension A from 4" through 4-1/2 ", 2-13/32 for dimension A greater than 4-1/2".

Figure 10. Check/Adjust 'Z' Dimension for 'F' Heads

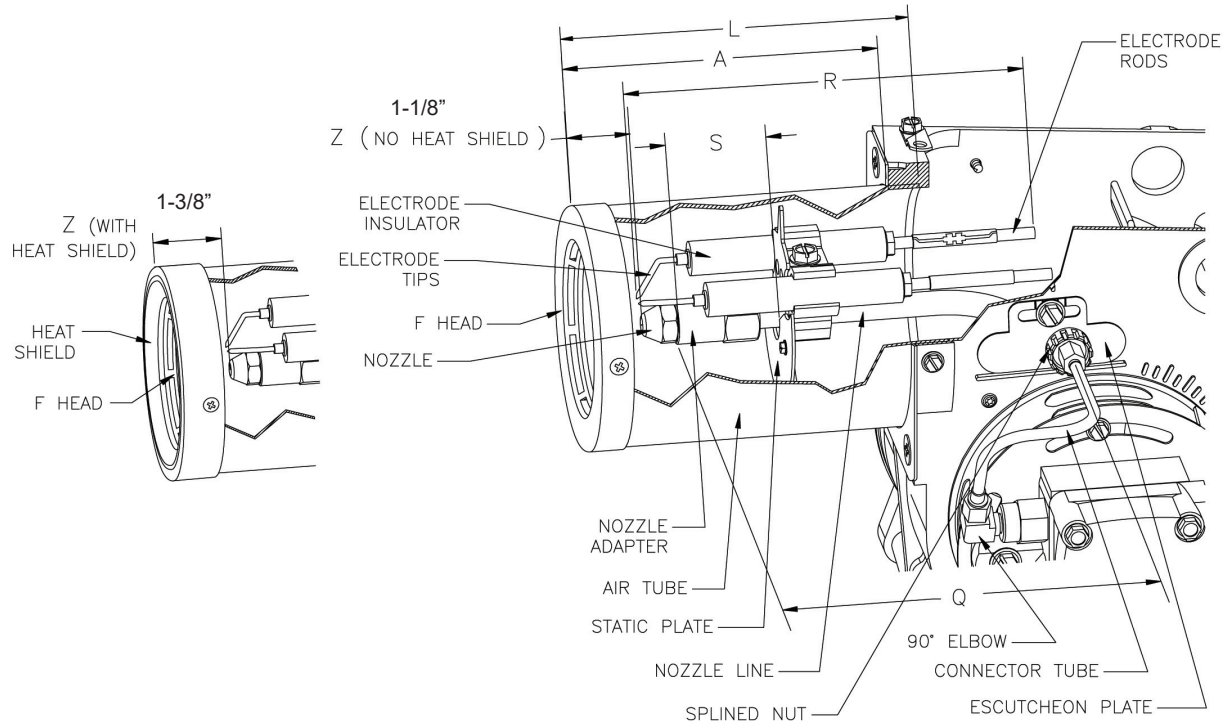

Check/Adjust 'Z' Dimension - 'F' heads

1. The important 'Z' dimension is the distance from the face of the nozzle to the flat face of the head (or heat shield, if applicable). This distance for F heads is 1-⅛" (1-⅜" if the air tube has a heat shield). The "Z" dimension is factory set for burners shipped with the air tube installed. Even if factory set, verify that the "Z" dimension has not been changed.
2. Use the following procedure to adjust the "Z" dimension if it is not correct:
   - Turn off the power to the burner.
   - Disconnect the oil connector tube from the nozzle line
   - Loosen the splined nut from the nozzle line. Loosen the hex head screw securing the escutcheon plate to the burner housing.
   - Place the end of a ruler at the face of the nozzle and, using a straight edge across the head, measure the distance to the face of the head. A Beckett T501 gauge may also be used.
   - Slide the nozzle line forward or back until this dimension for F heads is 1-⅛" (1-⅜" to the face of the heat shield, if applicable).
   - Tighten the hex head screw to secure the escutcheon plate to the burner chassis. Then tighten the splined nut and attach the oil connector tube.
3. Recheck the "Z" dimension periodically when servicing to ensure the escutcheon plate has not been moved. You will need to reset the "Z" dimension if you replace the air tube or nozzle line assembly. The Beckett Z gauge (part number Z-2000) is available to permit checking the F head "Z" dimension without removing the burner from the appliance.

Figure 11. Check/Adjust 'Z' Dimension - L1 & L2 Heads

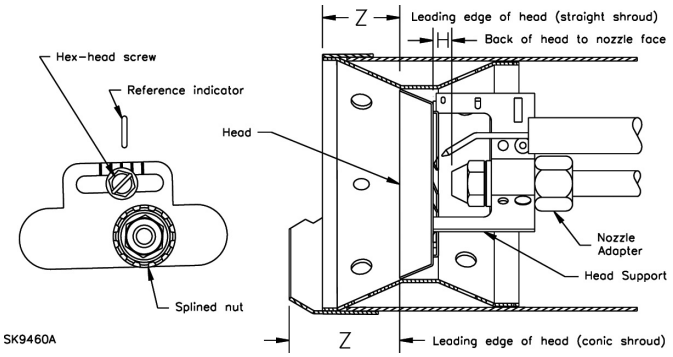

L1/L2 heads (see *Figure 8, page 9* for tip dimensions)

1. See figure above. The important "Z" dimension is the distance from the leading edge of the head to the end of the air tube. This distance for L1 & L2 heads is 1-3/8" if the tube has a straight shroud or 1-3/4" if the air tube has a conic shroud. The "Z" dimension is factory set for burners shipped with the air tube installed. Even if factory set, verify that the "Z" dimension has not been changed.
2. Use the following procedure to adjust the "Z" dimension, if it is not correct:
   - Turn off the power to the burner.
   - Disconnect the oil connector tube from the nozzle line.
   - Loosen the splined nut from the nozzle line. Loosen the hex head screw securing the escutcheon plate to the burner housing.
   - Place the end of a ruler at the leading edge of the head and, using a straight edge across the end of the air tube, measure the distance to the end of the tube. A Beckett T501 gauge may also be used.
   - Slide the nozzle line forward or back until this dimension is 1-3/8" for L1 & L2 heads if the tube has a straight shroud, or 1-3/4" if the air tube has a conic shroud.
   - Tighten the hex head screw to secure the escutcheon plate to the burner chassis. Then tighten the splined nut and attach the oil connector tube.
3. Recheck the "Z" dimension periodically when servicing to ensure the escutcheon plate has not been moved. You will need to reset the "Z" dimension if you replace the air tube or nozzle line assembly.

Figure 12. Check/Adjust 'Z' Dimension - V1 Heads

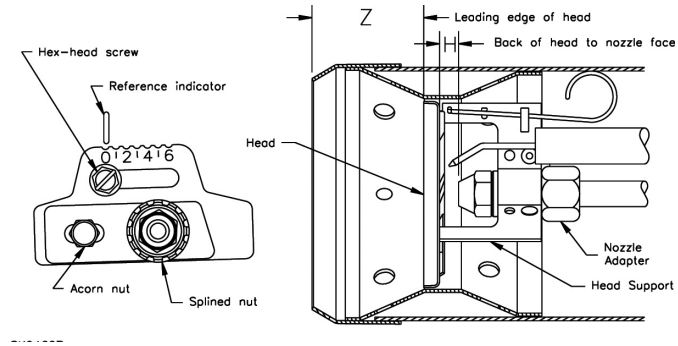

V1 heads (see *Figure 8, page 9* for tip dimensions)

1. See figure above. The important "Z" dimension is the distance from the leading edge of the head to the end of the air tube. This distance for V1 heads is 1-¾". The "Z" dimension is factory set for burners shipped with the air tube installed. Even if factory set, verify that the "Z" dimension has not been changed.
2. Use the following procedure to adjust the "Z" dimension, if it is not correct:
   - Turn off the power to the burner.
   - Disconnect the oil connector tube from the nozzle line.
   - Loosen the splined nut from the nozzle line. Loosen the hex head screw securing the head adjusting plate to the burner housing.
   - Loosen the acorn nut. Move the head adjusting plate until the "0" lines up with the reference indicator on the housing, and retighten the hex head screw. Place the end of a ruler at the leading edge of the head and, using a straight edge across the end of the air tube, measure the distance to the end of the tube. A Beckett T501 gauge may also be used.
   - Slide the nozzle line forward or back until this dimension is 1-¾" for V1 heads. Tighten the acorn nut.
   - Tighten the hex head screw to secure the head adjusting plate to the burner chassis. Then tighten the splined nut and attach the oil connector tube.
3. Recheck the "Z" dimension periodically when servicing to ensure the escutcheon plate has not been moved. You will need to reset the "Z" dimension if you replace the air tube or nozzle line assembly.

Figure 13. V1 Head Adjustment Plate Position Setting

1. After setting "Z" dimension, loosen head adjusting plate hex head screw and nozzle line splined nut. Move the nozzle line assembly until the burner reference indicator lines up with the head adjusting plate setting number given in Table shown to the right.
2. Tighten the hex head screw and splined nut. (DO NOT loosen the acorn nut when setting head position.) Refer to the manufacturer's instructions for OEM settings.
3. The position of the head affects air flow volume and pattern. For most applications, the burner will perform satisfactorily with the air adjustment plate setting of Table shown.
4. If combustion results indicate the need for change, adjust the head position adjusting plate forward or back one position at a time to optimize combustion.

Table for initial adjusting plate settings for V1 Head

V1 Adjusting Plate Setting	AFG with V1 Head Burner Firing Rates
0	0.75-1.00
1	1.00-1.50
2	1.50-1.75
3	1.75-2.00
4	2.00-2.25
5	2.25-2.50
6	2.50-2.75

WARNING **Oil Leak and Fire Hazard**

Install the oil tank following applicable standards in the U.S. by referring to the latest edition of NFPA 31 or CSA-B139 & CSA-B140 in Canada, and all authorities having jurisdiction.

WARNING **Do Not Install By-pass Plug with 1-Pipe System**

Failure to comply could cause Immediate pump seal failure, pressurized oil leakage and the potential for a fire and injury hazard.

- The burner is shipped without the by-pass plug installed.
- ONLY install the by-pass plug when using a TigerLoop® deaerator or for a two-pipe oil supply system.
- A TigerLoop® deaerator is recommended instead of a 2-pipe system. (*learn more at beckettcorp.com*)

NOTICE **Fuel Supply System Compatibility**

The fuel supply system design and components must be compatible with the fuel being used in the appliance. Follow all guidelines and best practices recommended by the fuel supplier, NFPA 30 & NFPA 31, and any state or local ordinances for safe storage, filtering, conditioning, and delivery to the burner.

CAUTION **Do Not Use Teflon Tape**

Damage to the pump could cause impaired burner operation, oil leakage and appliance soot-up.

- Never use Teflon tape on fuel oil fittings.
- Tape fragments can lodge in fuel line components and fuel unit, damaging the equipment and preventing proper operation.
- Use pipe joint sealant approved for use on kerosene, fuel oils and biodiesel fuels.

Mount Burner on Appliance

Mounting options

1. Bolt the burner to the appliance using the factory-mounted flange or an adjustable flange.

Mounting dimensions

1. When using the Beckett universal adjustable flange, mount the air tube at a 2° downward pitch unless otherwise specified by the appliance manufacturer.
2. Verify that the air tube installed on the burner provides the correct insertion depth. See ***Figure 14***.
3. The end of the air tube should normally be ¼" back from the inside wall of the combustion chamber. Never allow the leading edge of the head assembly to extend into the chamber, unless otherwise specified by the heating appliance manufacturer. Carefully measure the insertion depth when using an adjustable flange. Verify the insertion depth when using a welded flange.

Figure 14. – Mounting Burner in Appliance

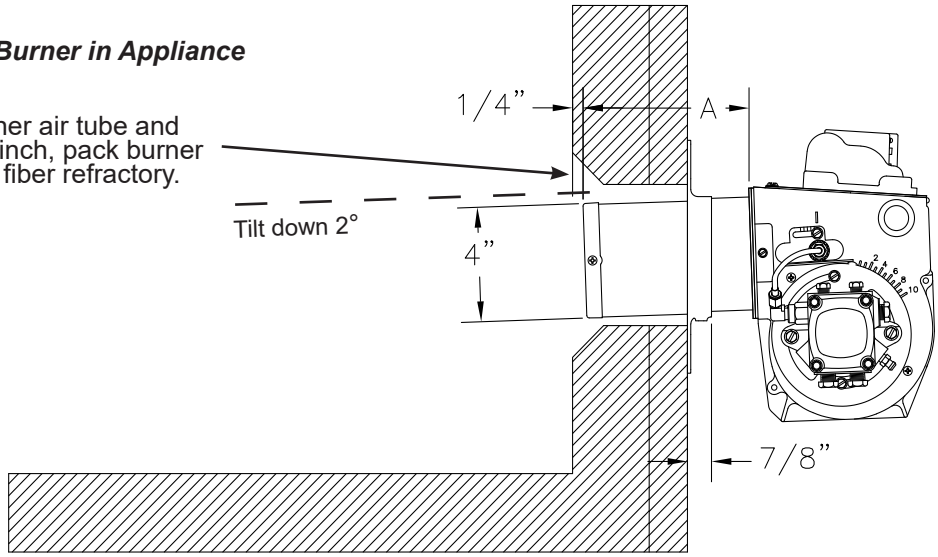

Carefully measure the insertion depth when using an adjustable flange. Verify the insertion depth when using a welded flange.

CAUTION **Oil Supply Pressure Control Required**

Damage to the filter or pump seals could cause oil leakage and a fire hazard.

- The oil supply inlet pressure to the burner ***cannot exceed 3 psig***.
- Ensure that a pressure limiting device is installed in accordance with the latest edition of NFPA 31.
- **Do NOT install valves in the return line.** (NFPA 31, Chapter 8.)
- **Gravity Feed Systems:** Always install an anti-siphon valve in the oil supply line or a solenoid valve (RWB Part # 2182602U) in the pump/nozzle discharge tubing to provide backup oil flow cut-off protection.

Installing the Oil Tank and Supply System

Note: To determine the proper fuel line size, refer to the fuel pump manufacturer's instructions provided with the burner. Refer to ***Figures 15*** or ***16*** for typical installation layouts.

Fuel Line Valves and Filter

Install two Firomatic® fusible oil line valves in accessible locations on the oil supply line. Firomatic® fusible oil line valves can be found at https://www.beckettcorp.com/product-category/oil-valves/. Install one Firomatic® valve close to the tank and the other close to the burner, upstream of the filter for service access. Installers may connect oil line into either the side or bottom of the pump. Refer to NFPA 31 or the Authorities Having Jurisdiction for further information regarding the placement of oil safety valves in the fuel supply system.
Install a Beckett or Westwood oil filter https://www.beckettcorp.com/product-category/oil-filters/#products between the fuel tank shutoff valve and the burner. Both the filter and the valve should be located close to the burner for ease of servicing.

Fuel supply level with or above burner

The burner may be equipped with a single-stage fuel unit for these installations. Connect the fuel supply to the burner with a single supply line if you want a one-pipe system (making sure the bypass plug is NOT installed in the fuel unit.) Manual bleeding of the fuel unit is required on initial start-up. If connecting a two-pipe fuel supply, install the fuel unit bypass plug.

Fuel supply below the level of the burner

When the fuel supply is more than eight feet below the level of the burner, a Tigerloop® deaerator is recommended. The installation may also require a two-stage pump. Consult the fuel unit manufacturer's literature, included with the burner, for the pump's lift and vacuum capability.

Fuel line installation

- Continuous lengths of heavy wall copper tubing are recommended. **Always use flare fittings. Never use compression fittings.**
- Always install fittings in accessible locations. Proper routing of fuel lines is required to prevent air cavitation and vibration.

Figure 15. – Inside Tank Gravity Feed System

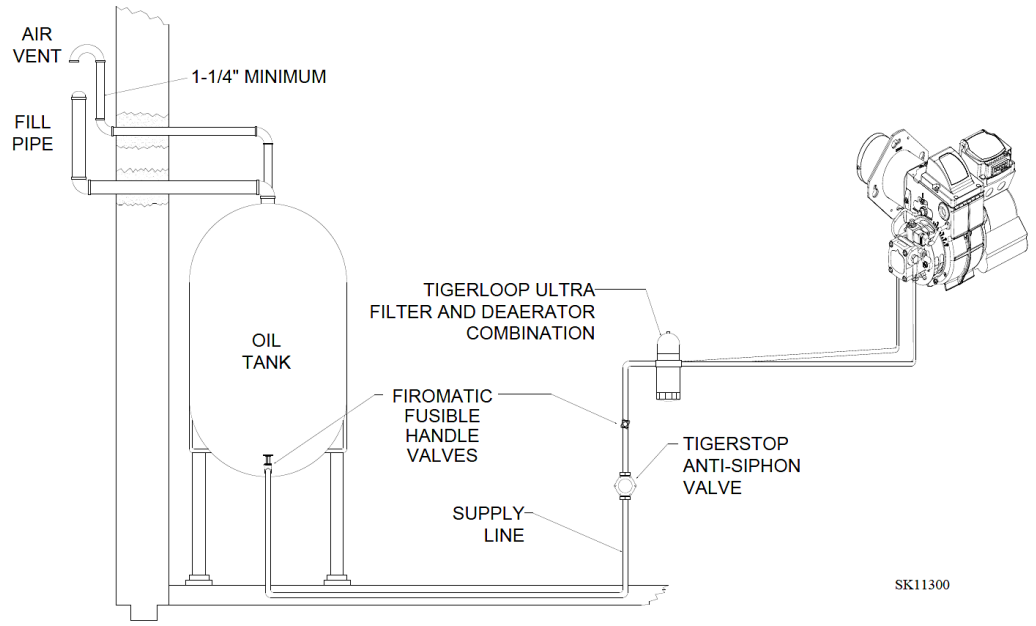

To further protect the fuel supply system and reduce nozzle orifice plugging with firing rates below 0.75 gph, a dual filtration system can be installed. This typically consists of a 50-micron primary filter, located near the fuel tank and a secondary filter rated for at least 10 microns located near the burner.

WARNING **Electrical Shock Hazard**

Electrical shock can cause severe personal injury or death.

- Disconnect electrical power before installing or servicing the burner.
- Ensure all wiring is properly routed and away from moving parts.
- Provide ground wiring to the burner, metal control enclosures and accessories. (This may also be required to aid proper control system operation.)
- Perform all wiring in compliance with the National Electrical Code ANSI/NFPA 70 (Canada CSA C22.1

Wire burner

Burner packaged with appliance

- Refer to appliance manufacturer's wiring diagram for electrical connections.

Burner installed at job site

- Refer to the appliance manufacturer's wiring diagram for electrical connections.
- **GeniSys 7565 Control Orientation:** Any orientation is acceptable, except upside down or with the terminal block (front) facing up, as this may compromise the unit's water resistance.
- Refer to the Genisys 7565 Advanced Burner Control manual for typical burner wiring. The wiring may vary depending on the appliance manufacturer's specifications.
- The 7565 control optional motor-off delay feature (post-purge) requires a constant 120 volts AC power source supplied to the BLACK wire on the control. The RED wire must be connected to the appliance limit circuit in this configuration. Please note that other manufacturers may use different wire colors for power and limit connections.
- Refer to the appliance manufacturer's wiring diagram prior to connecting the burner wiring. All wiring must be in accordance with the latest revision of National Electric Code NFPA 70 and all local codes and regulations. In Canada, all wiring is to be in accordance with the Canadian Electrical Code, Part 1.

Start Up Burner/Set Combustion

WARNING **Hot Gas Puff-Back and Heavy Smoke Hazard**

Failure to prime the pump properly could result in unstable combustion, hot gas puff-back and heavy smoke.

- Do not allow oil to spray into a hot combustion chamber while bleeding air from the pump.
- Install a gauge in the nozzle discharge port tubing or fully open the pump bleed valve to prevent oil spray from accumulating in the combustion chamber during the air bleed procedure.
- Ensure that all bubbles and froth are purged from the oil supply system before tightening the pump bleed valve.
- Ensure that the appliance is free of oil and oil vapor before starting or resetting the burner.

WARNING **Explosion and Fire Hazard**

Failure to follow these instructions could lead to equipment malfunction and result in heavy smoke emission, soot-up, hot gas puff-back, fire and asphyxiation hazards.

- Do not attempt to start the burner when excess oil has accumulated in the appliance, the appliance is full of vapor, or when the combustion chamber is very hot.
- Do not attempt to re-establish flame with the burner running if the flame becomes extinguished during start-up, venting, or adjustment.
- **Vapor-Filled Appliance:** Allow the unit to cool off and all vapors to dissipate before attempting another start.
- **Oil-Flooded Appliance:** Shut off the electrical power and the oil supply to the burner and then clear all accumulated oil before continuing.
- Keep a fire extinguisher nearby and ready for use.

CAUTION **Oil-Burning Equipment shall be connected to flues having sufficient draft at all times to ensure safe and proper operation of the burner.**

WARNING **Burn Hazard**

Internal components and external surfaces of the burner.

- DO NOT TOUCH: This burner may become extremely hot during operation. Contact with the surface can cause severe burns. Always allow the equipment to cool down before handling or performing any maintenance.
- KEEP FLAMMABLE MATERIALS AWAY: Ensure that no flammable materials are in proximity to the hot surfaces to avoid fire hazards.

Startup / Checkout

Follow the startup/checkout instructions in the primary control manual to start the system and checking of the safety features

1. Open the shutoff valves in the oil supply line to the burner.
2. Close air band and partially open air shutter. **This is an initial air setting for the pump bleeding procedure only. Additional adjustments must be made with instruments.**
3. Set the thermostat substantially above room temperature.
4. Close the line voltage switch to start the burner. If the burner does not start immediately you may have to reset the burner primary control.
5. To **Prime the Pump:** Initiate a call for heat.
6. Prime the pump by loosening the air bleed fitting and allowing oil to flow into a suitable container until all froth and bubbles are purged from the pump.
7. Adjust the oil pressure at the pump to the appliance manufacturer's recommended setting.

NOTICE For extensive air purge situations, the control can be toggled into a 4 minute Pump Prime mode.

- Initiate a call for heat.- After the burner starts, press and hold the ACTION button until the "SYS" light turns yellow (hold approximately 15 seconds). Release the ACTION button. The "SYS" yellow light will turn off and the burner will start again.
- During the startup, tap the ACTION button while the igniter is still on. This will transition the control to a dedicated Pump Prime mode during which the motor, igniter and valve are powered for 4 minutes.
- The SYS light will be solid yellow for the duration of Pump Prime mode. At the end of 4 minutes, the SYS light will change from yellow to green and the control will return to standby mode.

Set combustion with instruments

Allow the burner to run for approximately 5 to 10 minutes.

1. Set the stack or over-fire draft to the level specified by the appliance manufacturer.
   - **Natural Draft Applications;** typically over-fire draft is -0.01" or -0.02" w.c.
   - **Direct Venting**; typically may not require draft adjustment.
   - **High Efficiency/Positive Pressure Appliances**; also vary from traditional appliances. (see manufacturer's recommendations)
2. Follow these four steps to properly adjust the burner:

   Step 1: Adjust the air shutter/band until a trace of smoke is achieved.

   Step 2: At the trace of smoke level, measure the CO_2 (or O_2) . This is the vital reference point for further adjustments. Example: 13.5% CO_2 (2.6% O_2)

   Step 3: Increase the air to reduce the CO_2 by 1.5 to 2 percentage points. (O_2 will be increased by approximately 2.0 to 2.7 percentage points.) Example: Reduce CO_2 from 13.5% to 11.5% (2.6% to 5.3% O_2).

   Step 4: Recheck smoke level. It should be Zero.

   This procedure provides a margin of reserve air to accommodate variable conditions.

   If the draft level has changed, recheck the smoke and CO_2 levels and readjust the burner if necessary.

3. Once combustion is set, tighten all fasteners on air band, air shutter and head adjusting plate or escutcheon plate.
4. Burner equipped with cover - Reinstall the cover and repeat Steps 2 and 4. If CO_2 increases (O_2 decreases), remove the cover and adjust the air setting so the CO_2 (O_2) with cover on meets requirements of Step 3.

Start and stop the burner several times to ensure satisfactory operation. Test the primary control and all other appliance safety controls to verify that they function according to the manufacturer's specifications.

Analyzers with Biodiesel Blends

Most combustion analyzers don't have a specific setting for biodiesel, which can lead to confusion about the correct fuel type to select. Typically, these analyzers measure oxygen (O2) and carbon monoxide (CO) and then calculate other readings based on the selected fuel type.

Recommended Setup:

Fuel Setting: When working with any blend of biodiesel, set the combustion analyzer to "light oil" or "#2 oil."

CO2 Readings: Expect a slight discrepancy in the CO2 reading due to this setting. For B100 (100% biodiesel), the CO2 reading on the analyzer will be lower than it actually is by roughly 0.3%. The deviation is minor for biodiesel blends like B20 (under 0.1%).

NOTICE

Acceptable Measurement Variance: This difference is within the AHR standard tolerance for combustion analyzers, which allows a ±0.3% variation, so no action is required in most cases. However, for the most accurate measurement with B100, you should add 0.3% to the reading on the meter if a #2 oil setting is used.

Using O2 as an Alternative Measurement:

If preferred, use the O2 reading to set up combustion. Because it is a direct measurement and not a calculation based on the fuel type, it is more accurate for blended fuels. For biodiesel blends, aim for an O2 range of 4.5-5.7%, which corresponds to a CO2 range of 11.3-12.3%.

Perform Regular Maintenance

- ☐ Replace the oil supply line filter. The line filter cartridge must be replaced to avoid contamination of the fuel unit and nozzle.
- ☐ Inspect the oil supply system. All fittings should be leak-tight. The supply lines should be free of water, sludge and other restrictions.
- ☐ Remove and clean the pump strainer, replace if necessary. Replace the pump strainer cover gasket or O-ring.
- ☐ Verify the nozzle is the one originally specified by the appliance manufacturer and replace the nozzle with one having the exact specifications from the same manufacturer.
- ☐ Clean and inspect the electrodes for damage, replacing any that are cracked or chipped.
- ☐ Check electrode tip settings. Replace electrodes if tips are rounded.
- ☐ Inspect the igniter contacts. Clean or replace if corroded.
- ☐ Clean the cad cell lens surface, if necessary.
- ☐ Inspect all gaskets. Replace any that are damaged or would fail to seal adequately.
- ☐ Inspect the combustion head and air tube. Remove any carbon or foreign matter. Replace all damaged units with exact parts.
- ☐ Clean the blower wheel, air inlet, air guide, burner housing and static plate of any lint or foreign material.
- ☐ Check motor current. The amp draw should not exceed the nameplate rating.
- ☐ Check all wiring for secure connections or insulation breaks.
- ☐ Check the pump pressure and cutoff function.
- ☐ Check primary control safety lockout timing.
- ☐ Check ignition system for proper operation.
- ☐ Inspect the vent system and chimney for soot accumulation or other restriction.
- ☐ Clean all flue passages and flue pipe. Replace corroded or damaged pipes.
- ☐ Clean the appliance thoroughly according to the manufacturer's recommendations.
- ☐ Check the burner performance. Refer to the section "Set combustion with instruments".
- ☐ Record the service performed and combustion test results. Use the myTechnician® app to record and store all this information. The app provides a wireless Bluetooth connection to a Beckett® burner with the GeniSys® 7565 120V Oil Burner Advanced Primary Control. The app allows you to monitor the current status, control timings, burner cycle history and program the control variables directly from your phone. With its advanced troubleshooting feature, it provides guidance for diagnostics and troubleshooting information related to the end causes.

The **myTechnician® app** is available for both **iOS** and **Android** operating systems (see page 22)

Shutting the Burner Off

Turn off all electric power to the burner.
Note: There could be more than one disconnect switch.

CAUTION **Always keep the fuel oil supply valve shut-off if the burner(s) is shut down for an extended period of time.**

WARNING **Annual Professional Service Required**

Tampering with or making incorrect adjustments could lead to equipment malfunction and result in asphyxiation, explosion or fire.

- **DO NOT TAMPER WITH THE UNIT OR CONTROLS - CALL YOUR SERVICE PERSONNEL.**
- To ensure continued reliable operation, a qualified service technician must service this burner annually.
- More frequent service intervals may be required in dusty or adverse environments.
- Operation and adjustment of the burner requires technical training and skillful use of combustion test instruments and other test equipment.

Related Products

Tigerloop®

Firomatic® Fire Safety Valves

Spin-on Filter Adapter

Spin-on Filter

Learn more about these products at Beckettcorp.com

Replacement Parts

For best performance specify genuine Beckett replacement parts

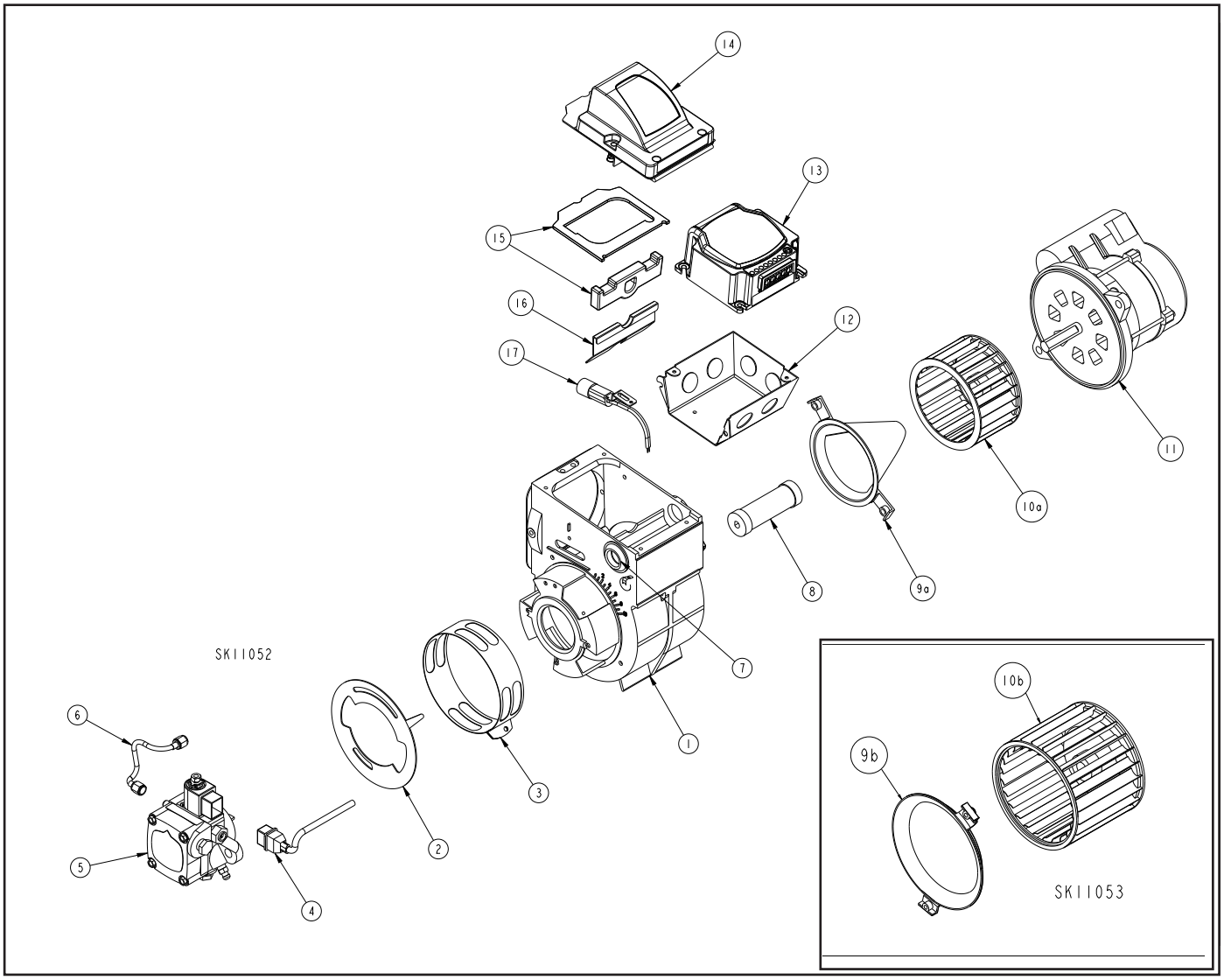

Replacement Burner Parts				
Item	Part #	Description	AF	AFG
1	5624B	Burner Housing Assembly	X	
1	5874BKU	Burner Housing Assembly		X
2	3709U	Air Shutter - 4 Slot		X
2	3494U	Air Shutter - 8 Slot	X	
3	5151501	Air Band - 8 Slot	X	X
4	21807U	Valve Cordset	X	X
5	PF20321U	CleanCut Pump	X	X
6	5394	Copper Oil Line - 8”	X	X
7	2139	Hole Plug	X	X
8	2454	Coupling	X	X

Replacement Parts				
Item	Part #	Description	AF	AFG
9a	31231U	Air Guide		X
9b	31841U	Air Inlet Bell	X	
10a	2999U	Blower Wheel		X
10b	2459U	Blower Wheel	X	
11	21805U	PSC Motor	X	X
12	5770	Electrical Box	X	X
13	7565U	CONTROL 120V	X	X
14	51771U	Igniter & Base Plate 120 VAC	X	X
15	51304	Igniter Gasket Kit		X
16	5880	Low Firing Rate Baffle		X
17	7006U	Cad Cell Detector	X	X

Air Tubes, Nozzle Lines, Electrodes, Parts

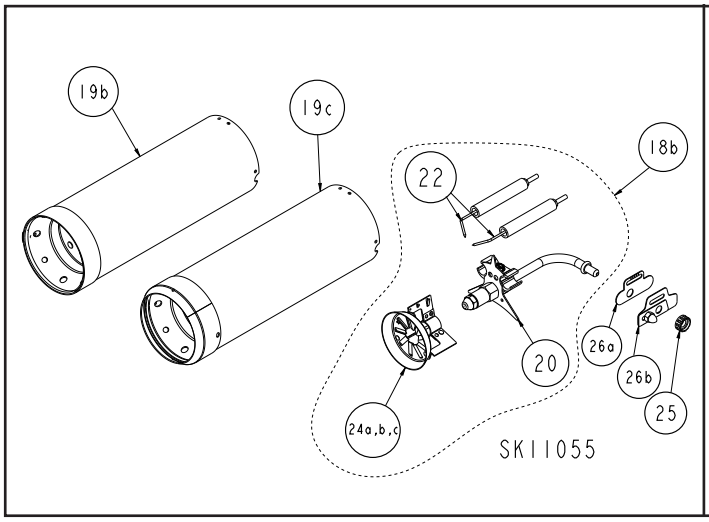

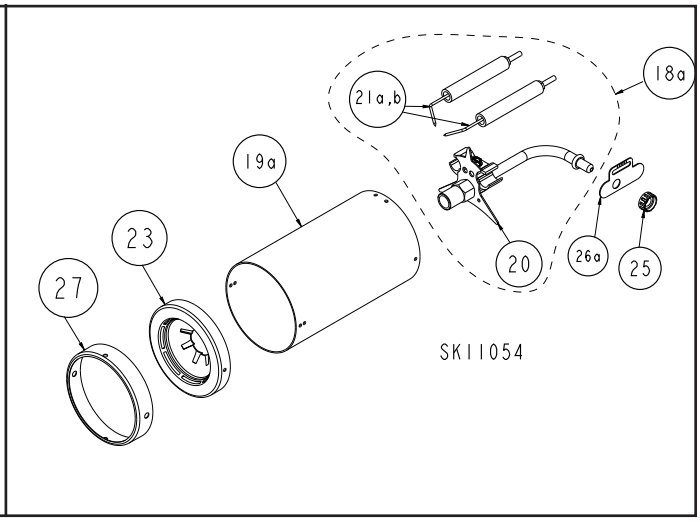

Air Tubes, Nozzle Lines, Electrodes, Parts				
Item	Part #	Description	AF	AFG
	ATC's	Complete Air Tube Combinations- Refer to ***Figure 3***, Page 5	X	X
18a	SL**	Nozzle Line Electrode Assembly (NLEA) - 'F' Head Air Tubes	X	X
18b	SL**	Nozzle Line Electrode Assembly (NLEA) - 'M' Head Air Tubes		X
19a	SL**	Tube Only - 'F' Head	X	X
19b	SL**	Tube Only - 'M' Tube Straight Shroud		X
19c	SL**	Tube Only - 'M' Tube Conic Shroud		X
20	213U	Nozzle Adapter	X	X
21a	5780	Electrode Kit - 'F' Head up to 9" Tube Length	X	X
21b	5782	Electrode Kit - 'F' Head 9" + Tube Length	X	X
22	5940	Electrode Kit - 'M' Head up to 9" Tube Length		X
23	F' Head	F0 / F3 / F4 / F6 / F12 / F22 / F31	X	X
24a	5912U	L1 Head Assembly		X
24b	51895U	L2 Head Assembly		X
24c	5913U	V1 Head Assembly		X
25	3666U	Splined Nut	X	X
26a	3493	Head Adjusting Plate ('F', L1, L2 Heads)	X	X
26b	5941	Head Adjusting Plate (V1 Head)		X
27	51586	Heat Shield - 'F' Head only	X	X

** Specify Length

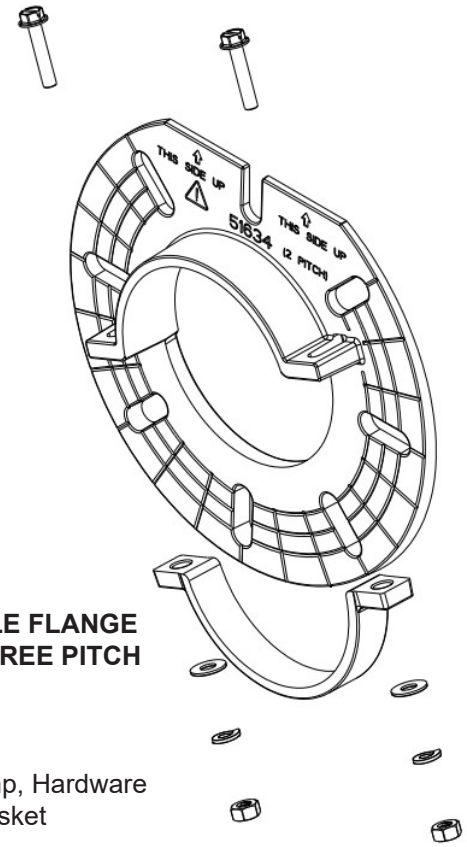

ADJUSTABLE FLANGE WITH 2 DEGREE PITCH 51634U

Includes:
Flange, Clamp, Hardware
Universal Gasket

Burner Mounting Flange & Pedestals

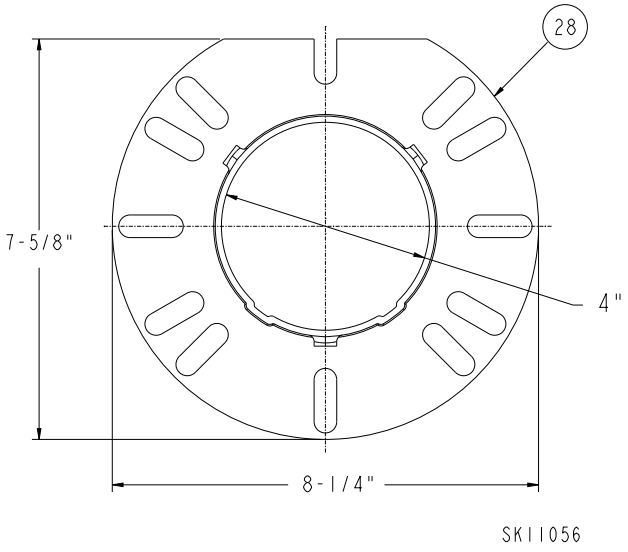

Mounting Flange & Gasket Kit 5432

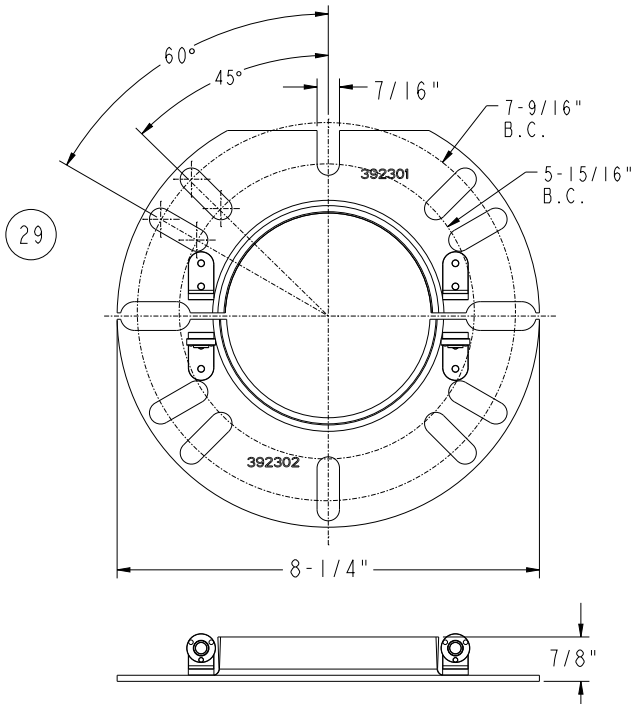

Split Mounting Flange & Gasket Kit 5850

Mounting Flanges NS* (Not Shown)				
Item	Part #	Description	AF	AFG
28	5432	Universal Flange w/ Gasket	X	X
29	5850	Split Flange w/ Gasket	X	X
NS*	31653	Round Flange Gasket Only	X	X
NS*	31802	Square Flange Gasket Only	X	X

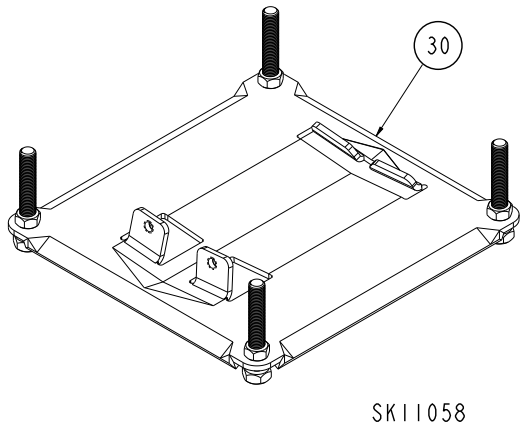

Pedestal Kit 5685

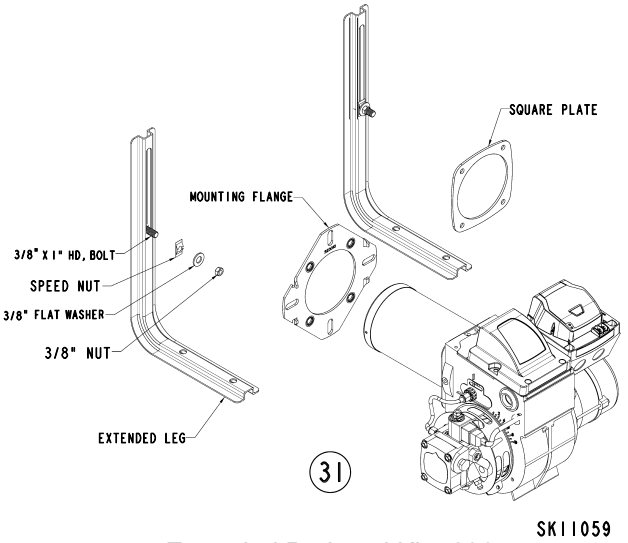

Extended Pedestal Kit 5606

Pedestals Kits				
Item	Part #	Description	AF	AFG
30	5685	Pedestal Kit	X	X
31	5606	Pedestal Kit - Extended	X	X

Burner Accessories

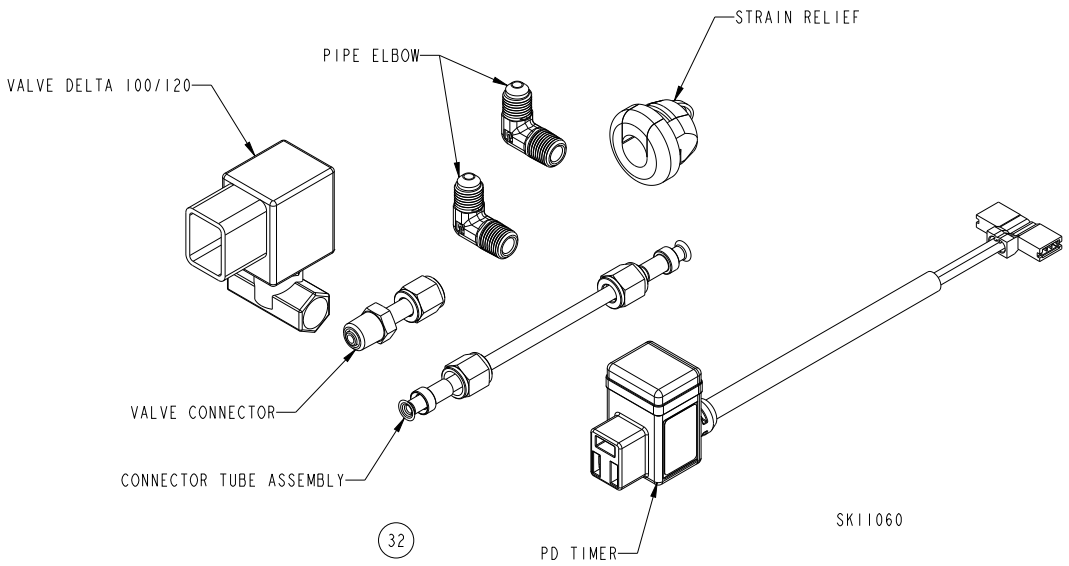

Solenoid Valve Kit 2182602U

Solenoid Valve				
Item	Part #	Description	AF	AFG
32	2182602U	Solenoid Valve Kit (Delay)	X	X

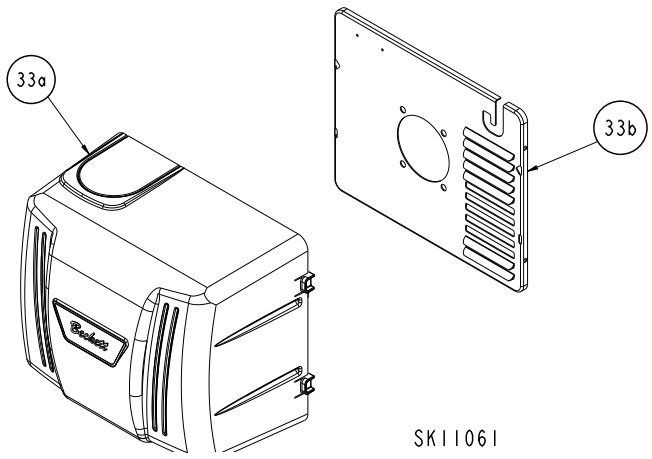

Burner Cover Replacement Parts

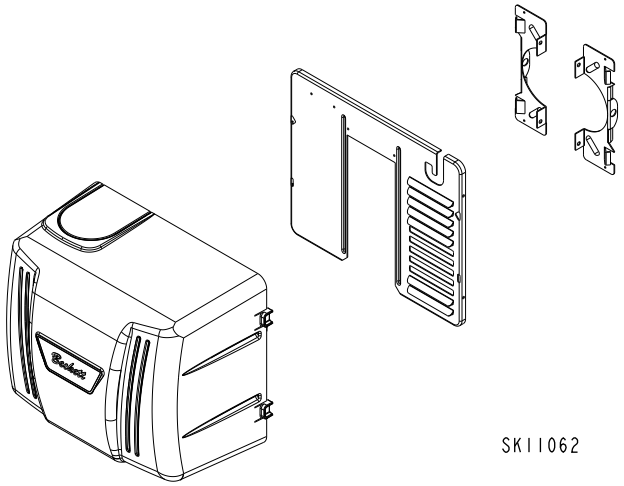

Burner Cover Retrofit Kit 5207301U

Burner Covers for AF and AFG Burners				
Item	Part #	Description	AF	AFG
33	5207301U	Burner Cover Kit	X	X
33a	52642001U	Replacement Cover Only	X	X
33b	32109BK	Cover Mounting Plate	X	X

Outside Air Kits for AF and AFG Burners	
Part Number	Description
51747	Air Boot Kit Includes: Burner air boot adapter, Vacuum Relief, Inlet air hood
51851U	Outside air adapter for use with 5207301U burner cover kit
51908U	Air Boot Kit – Mobile Home Applications: Air boot, gaskets, instructions

Burner Gauges, myTechnician App™

Z2000U - Orange Gauge Kit

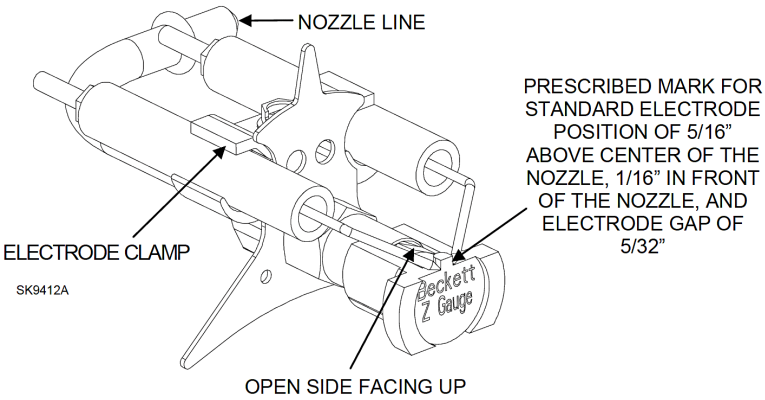

T501 MULTIPURPOSE GAUGE - For RF, NX, AF, AFG, AFII, SR, SM, and SF Burners

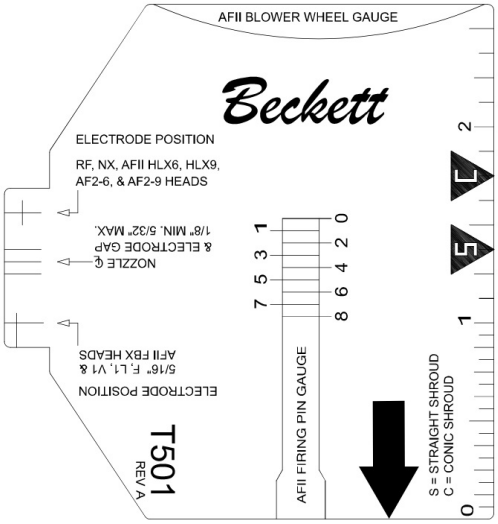

myTechnician™ Mobile Application

The myTechnician™ Mobile Application is an essential tool for professional oil heat technicians, helping identify problems, reduce job time, and eliminate call backs. It connects via Bluetooth to Beckett® burners with the advanced GeniSys® 7565 120V Oil Burner Control, allowing technicians to program settings, view history, diagnose faults, and evaluate trends quickly. The myTechnician™ app is available on both iOS and Android.

Apple Store

my Technician™ POWERED BY BECKETT

Google Play

Burner Start – Up Report

Installation Information

Burner Model: _____ Serial #: _____

Appliance Mfg: _____ Appliance Model: _____

Installation Date: _____ Set-up Date: _____

Company: _____

Address: _____

Phone: _____

Owner Name: _____

Installation Address: _____

Burner Set-Up Information

Burner Model: AF / AFG Head: F / L1 / L2 / V1 - V1 Setting: ____

Nozzle Installed: _____

Pump Pressure: _____

Air Settings - Shutter: _____ Band: _____

Draft Overfire: _____ Draft Breech: _____

Smoke #: _____ CO2: _____ O2: _____ CO: _____

Fuel: _____ Tank Location - Indoor _____ Outdoor _____

Fuel System - One Pipe ____ Two Pipe ____ De-aerator: Yes ____ No ____

Fuel Filter(s): _____

Limited Warranty Information

Scan QR or visit **Beckettcorp.com/support/warranty** for the most up-to-date warranty information.

USA: **R.W. Beckett Corporation,** 1-800-645-2876
Canada: **R.W. Beckett Canada Ltd,** 1-800-665-6972
www.beckettcorp.com

Printed in the USA 05/26 Form No. 6104 BAFG R12

This document and all information contained herein are the sole property of the R.W. Beckett Corporation and cannot be reproduced or transmitted in whole or part without express written permission of the R.W. Beckett Corporation.